P2-BBRRMM15-N0

P2-BBRRMM15-S0

Features

- 4 ports / 2 cross pol systems in low band (698-960 MHz)
- 2 cross pol systems in high band (1695-2690 MHz), diplexed, resulting in 4 ports 1695-2200 MHz and 4 ports 2490-2690 MHz
- Supporting 4x4 MIMO in low band and in high band
- Integrated and field replaceable SRET
- Optional with Site Sharing feature (Model name suffix -S0)
- Compliant with AISG v2.0 and 3GPP

PRODUCT OVERVIEW							
	Frequency Range (MHz)	(2x) 698-960		(2x) 1695-2200		(2x) 2490-2690	
	Array	R1	R2	B1	B2	Y1	Y2
	Connector	1-2	3-4	5-6	7-8	9-10	11-12
		12 PORTS					
	Polarization	XPOL					
	Azimuth Beamwidth (avg)	65°		65°		65°	
	Electrical Downtilt	2-15°		2-12°		2-12°	
	Dimensions	1588 x 499 x 199 mm (62.5 x 19.6 x 7.8 in)					

ORDERING OPTIONS Select from the following ordering options

ANTENNA MODEL NUMBER	CONFIGURATION	MOUNTING HARDWARE	MOUNTING PIPE DIAMETER	SHIPPING WEIGHT	MOUNTING HARDWARE WEIGHT
P2-BBRRMM15-N0	ACU-I20-B6 Internal RET Included	APM50-B1 Beam Tilt Kit Included	50-110 mm (2.0-4.3 in)	37.5 kg (82.7 lbs)	4.5 kg (9.9 lbs)
P2-BBRRMM15-S0	ACU-X20-B6 Internal Site Sharing RET Included	APM50-B1 Beam Tilt Kit Included	50-110 mm (2.0-4.3 in)	37.5 kg (82.7 lbs)	4.5 kg (9.9 lbs)

P2-BBRRMM15-N0

P2-BBRRMM15-S0

ELECTRICAL SPECIFICATIONS

■ R1

Frequency Range		MHz	698-960		
		MHz	698-806	790-894	880-960
Polarization		---	±45°		
Gain	Over all Tilts	dBi	13.5 ± 0.9	14.6 ± 0.5	14.9 ± 0.4
	Max Gain	dBi	14.4	15.1	15.3
Azimuth Beamwidth (3 dB)		degrees	60.4° ± 4.1°	60.6° ± 2.1°	60.7° ± 3.7°
Elevation Beamwidth (3 dB)		degrees	16.2° ± 1.3°	14.9° ± 0.7°	13.9° ± 0.7°
Electrical Downtilt		degrees	2-15°		
Impedance		Ohms	50Ω		
VSWR (Return Loss)		---	1.5:1 (-14 dB)		
Passive Intermodulation 3rd Order for 2x20 W Carriers		dBc	-150		
Front-to-Back Ratio, Total Power, ± 30°		dB	17.1	22.2	22.2
First Upper Side Lobe Suppression		dB	18.7	15.7	13.6
Cross Polar Discrimination Over Sector		dB	6.1	9.6	6.5
Cross Polar Discrimination (XPD) at Mechanical Boresight (0°)		dB	15.4	17.3	17.7
Maximum Effective Power Per Port		Watts	350 W		
Cross Polar Isolation		dB	26		
Interband Isolation		dB	26		

Specifications follow BASTA guidelines.

ELECTRICAL SPECIFICATIONS

■ R2

Frequency Range		MHz	698-960		
		MHz	698-806	790-894	880-960
Polarization		---	±45°		
Gain	Over all Tilts	dBi	13.6 ± 1	14.6 ± 0.5	15.1 ± 0.3
	Max Gain	dBi	14.6	15.1	15.4
Azimuth Beamwidth (3 dB)		degrees	61.3° ± 5°	61.4° ± 2.6°	60.7° ± 2.8°
Elevation Beamwidth (3 dB)		degrees	16.1° ± 1.3°	14.7° ± 0.7°	13.8° ± 0.7°
Electrical Downtilt		degrees	2-15°		
Impedance		Ohms	50Ω		
VSWR (Return Loss)		---	1.5:1 (-14 dB)		
Passive Intermodulation 3rd Order for 2x20 W Carriers		dBc	-150		
Front-to-Back Ratio, Total Power, ± 30°		dB	17.4	21.7	21
First Upper Side Lobe Suppression		dB	17.4	16.3	15.2
Cross Polar Discrimination Over Sector		dB	6.8	10	8.7
Cross Polar Discrimination (XPD) at Mechanical Boresight (0°)		dB	14.8	16.7	19.2
Maximum Effective Power Per Port		Watts	350 W		
Cross Polar Isolation		dB	26		
Interband Isolation		dB	26		

Specifications follow BASTA guidelines.

P2-BBRRMM15-N0

P2-BBRRMM15-S0

ELECTRICAL SPECIFICATIONS			B1		
Frequency Range		MHz	1695-2200		
		MHz	1695-1880	1850-1990	1920-2200
Polarization		---	±45°		
Gain	Over all Tilts	dBi	16.7 ± 0.9	16.7 ± 1.2	17 ± 1.3
	Max Gain	dBi	17.6	17.9	18.3
Azimuth Beamwidth (3 dB)		degrees	57.2° ± 3.7°	60.8° ± 8.4°	61.9° ± 8°
Elevation Beamwidth (3 dB)		degrees	6.2° ± 0.4°	5.9° ± 0.3°	5.5° ± 0.5°
Electrical Downtilt		degrees	2-12°		
Impedance		Ohms	50Ω		
VSWR (Return Loss)		---	1.5:1 (-14 dB)		
Passive Intermodulation 3rd Order for 2x20 W Carriers		dBc	-150		
Front-to-Back Ratio, Total Power, ± 30°		dB	21.6	22.8	23
First Upper Side Lobe Suppression		dB	18.5	16.7	15.4
Cross Polar Discrimination Over Sector		dB	8.5	5.8	5.7
Cross Polar Discrimination (XPD) at Mechanical Boresight (0°)		dB	16.1	16.5	14.3
Maximum Effective Power Per Port		Watts	250 W		
Cross Polar Isolation		dB	26		
Interband Isolation		dB	26		

Specifications follow BASTA guidelines.

ELECTRICAL SPECIFICATIONS			B2		
Frequency Range		MHz	1695-2200		
		MHz	1695-1880	1850-1990	1920-2200
Polarization		---	±45°		
Gain	Over all Tilts	dBi	16.6 ± 0.8	16.7 ± 1.2	16.9 ± 1.2
	Max Gain	dBi	17.4	17.9	18.1
Azimuth Beamwidth (3 dB)		degrees	58.2° ± 5°	59.2° ± 5.4°	61.4° ± 9.2°
Elevation Beamwidth (3 dB)		degrees	6.3° ± 0.3°	5.8° ± 0.4°	5.5° ± 0.5°
Electrical Downtilt		degrees	2-12°		
Impedance		Ohms	50Ω		
VSWR (Return Loss)		---	1.5:1 (-14 dB)		
Passive Intermodulation 3rd Order for 2x20 W Carriers		dBc	-150		
Front-to-Back Ratio, Total Power, ± 30°		dB	23.1	23.1	22.4
First Upper Side Lobe Suppression		dB	19	16.5	15.8
Cross Polar Discrimination Over Sector		dB	9	5.4	5.2
Cross Polar Discrimination (XPD) at Mechanical Boresight (0°)		dB	15.8	17	14.6
Maximum Effective Power Per Port		Watts	250 W		
Cross Polar Isolation		dB	26		
Interband Isolation		dB	26		

Specifications follow BASTA guidelines.

P2-BBRRMM15-N0

P2-BBRRMM15-S0

ELECTRICAL SPECIFICATIONS			Y1
Frequency Range		MHz	2490-2690
Polarization		---	±45°
Gain	Over all Tilts	dBi	17.6 ± 0.8
	Max Gain	dBi	18.4
Azimuth Beamwidth (3 dB)		degrees	50.5° ± 5.8°
Elevation Beamwidth (3 dB)		degrees	4.6° ± 0.3°
Electrical Downtilt		degrees	2-12°
Impedance		Ohms	50Ω
VSWR (Return Loss)		---	1.5:1 (-14 dB)
Passive Intermodulation 3rd Order for 2x20 W Carriers		dBc	-150
Front-to-Back Ratio, Total Power, ± 30°		dB	24.9
First Upper Side Lobe Suppression		dB	15
Cross Polar Discrimination Over Sector		dB	0.7
Cross Polar Discrimination (XPD) at Mechanical Boresight (0°)		dB	23.2
Maximum Effective Power Per Port		Watts	250 W
Cross Polar Isolation		dB	26
Interband Isolation		dB	26

Specifications follow BASTA guidelines.

ELECTRICAL SPECIFICATIONS			Y2
Frequency Range		MHz	2490-2690
Polarization		---	±45°
Gain	Over all Tilts	dBi	17.7 ± 0.6
	Max Gain	dBi	18.3
Azimuth Beamwidth (3 dB)		degrees	51.2° ± 5.7°
Elevation Beamwidth (3 dB)		degrees	4.5° ± 0.3°
Electrical Downtilt		degrees	2-12°
Impedance		Ohms	50Ω
VSWR (Return Loss)		---	1.5:1 (-14 dB)
Passive Intermodulation 3rd Order for 2x20 W Carriers		dBc	-150
Front-to-Back Ratio, Total Power, ± 30°		dB	25.1
First Upper Side Lobe Suppression		dB	15.6
Cross Polar Discrimination Over Sector		dB	0.8
Cross Polar Discrimination (XPD) at Mechanical Boresight (0°)		dB	20.2
Maximum Effective Power Per Port		Watts	250 W
Cross Polar Isolation		dB	26
Interband Isolation		dB	26

Specifications follow BASTA guidelines.

P2-BBRRMM15-N0

P2-BBRRMM15-S0

BOTTOM VIEW - LABELING

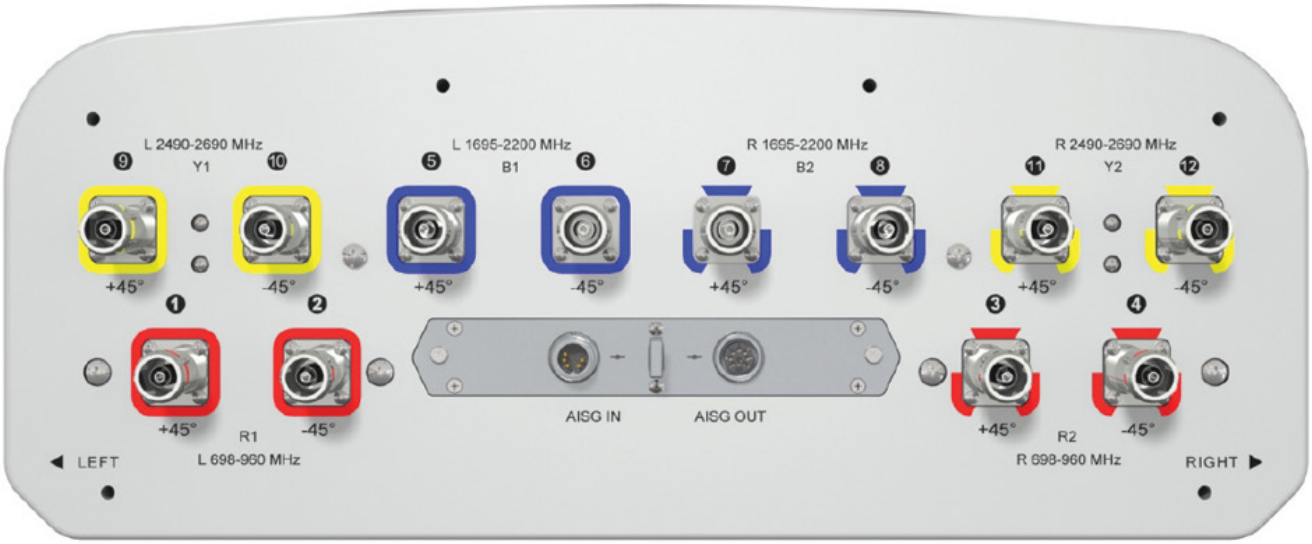

ARRAY LAYOUT

ARRAY	FREQUENCY	CONNECTOR	CONNECTOR TYPE	RET	AISG RET UID
R1	698-960 MHz	1-2	(2x) 4.3-10 Female	R1	RFxxxxxxxxxxx-R1
R2	698-960 MHz	3-4	(2x) 4.3-10 Female	R2	RFxxxxxxxxxxx-R2
B1	1695-2200 MHz	5-6	(2x) 4.3-10 Female	B1	RFxxxxxxxxxxx-B1
B2	1695-2200 MHz	7-8	(2x) 4.3-10 Female	B2	RFxxxxxxxxxxx-B2
Y1	2490-2690 MHz	9-10	(2x) 4.3-10 Female	Y1	RFxxxxxxxxxxx-Y1
Y2	2490-2690 MHz	11-12	(2x) 4.3-10 Female	Y2	RFxxxxxxxxxxx-Y2

NOTE: RET motors will tilt one at a time, not simultaneously

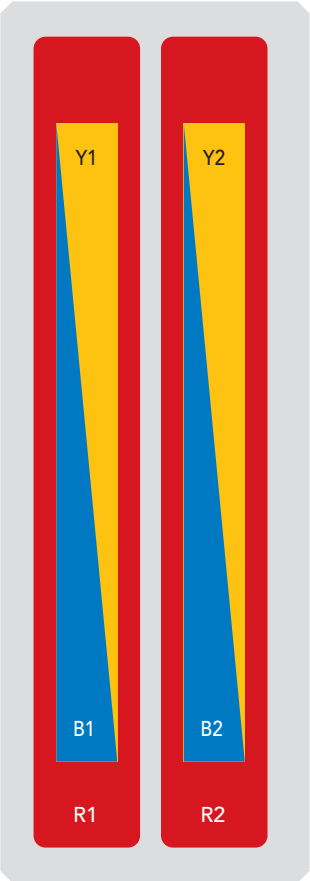

The illustration is not shown to scale.

P2-BBRRMM15-N0

P2-BBRRMM15-S0

MECHANICAL SPECIFICATIONS

Length		mm (in)	1588 (62.5)
Width		mm (in)	499 (19.6)
Depth		mm (in)	199 (7.8)
Net Weight - Antenna Only		kg (lbs)	29 (63.9)
Wind Load Rated at 150 km/h (93 mph)	Front	N (lbf)	526 (118)
	Side	N (lbf)	459 (103)
	Rear	N (lbf)	610 (137)
Survival Wind Speed / Rated Wind Speed		km/h (mph)	200 (150)
Connector Type		--	(12x) 4.3-10 Female, (2x) AISG Connectors (1 Male, 1 Female) at Bottom Site Sharing: (4x) AISG Connectors (2 Male, 2 Female) at Bottom
Radome Color		---	Light Grey RAL7035
Radome Material		---	Fiberglass
Lightning Protection		---	Direct Ground
Shipping	Packing Size (Length x Width x Depth)	mm (in)	1840 x 595 x 295 (72.4 x 23.4 x 11.6)

ENVIRONMENTAL SPECIFICATIONS

Environmental Standard	---	ETS 300 019
Operating Temperature	degrees	-40° to +60° C (-40° to +140° F)
Product Environmental Compliance	---	Product is RoHS Compliant

P2-BBRRMM15-N0

P2-BBRRMM15-S0

ACCESSORIES

Accessories may be ordered separately unless otherwise indicated.

ITEM	MODEL NUMBER	WEIGHT
Beam Tilt Mounting Bracket Kit for Pole Diameter 50-110 mm (2.0-4.3 in) *Shipped with Antenna*	APM50-B1	4.5 kg (9.9 lbs)

INSTALLATION

Please read all installation notes before installing product.

	Always attach the antenna using all mounting points.
	Do not install antenna with the connectors facing upwards.

EXTERNAL DOCUMENT LINKS

APM50 Mounting Kit Series Installation Instructions

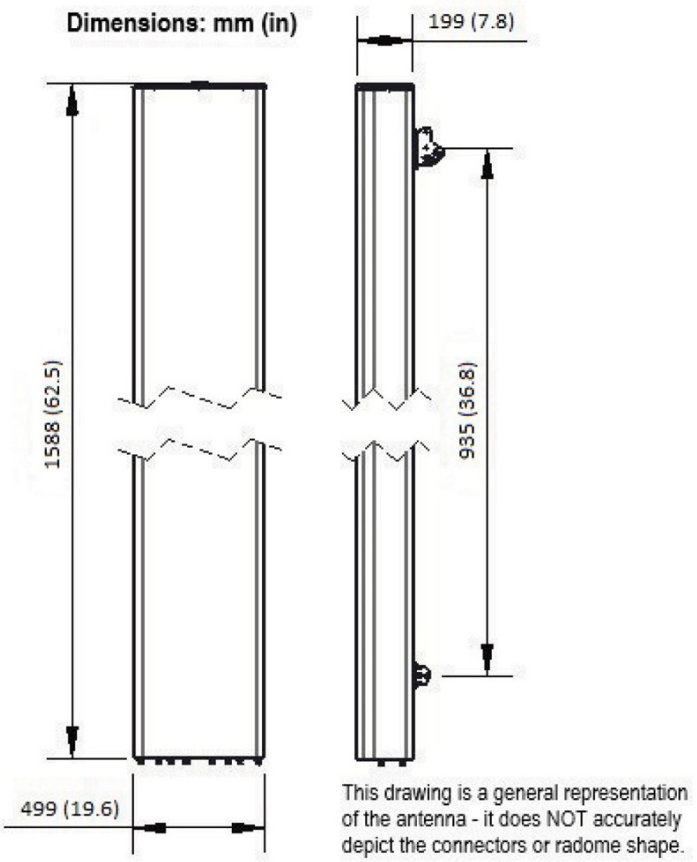

NOTES

Specifications follow BASTA guidelines.

For additional mounting information, please check **External Document Links**.

For Radiating Patterns: Request pattern files